Kosan Crisplant®

FLEX SPEED®

SYSTEM DESCRIPTION

The *only* high-speed filling system for LPG cylinders in the world

www.flexspeed.info

GENERAL DESCRIPTION

All position numbers in the following description refer to the drawing *FLEXSPEED* LAYOUT.

The core components of the *FLEXSPEED* system consist of:

- Divert module for sorting of cylinders (e.g. sorting for filling, reconditioning, scrap, etc.)
- Carrousel system with integrated filling stands and check weighing function plus in- and outlet system. The carrousel system is available in different sizes with varying numbers of filling stands.
- Process modules (e.g. leak detection, valve testing, cap application, seal shrinking)

Furthermore, it is recommended to connect the following standard equipment to the *FLEXSPEED* system:

- Cylinder loading/unloading system (e.g. pallet plant, telescopic conveyors or similar)
- Variable/high speed chain conveyor system, controlled by the *FLEXSPEED* logistic control system including PLC and frequency inverters
- Tare encoding system (vision recognition system, tag/barcode reading system)
- In-line adjustment filling scale
- In-line leak detector
- In-line valve tester
- Power supply
- Data collection system

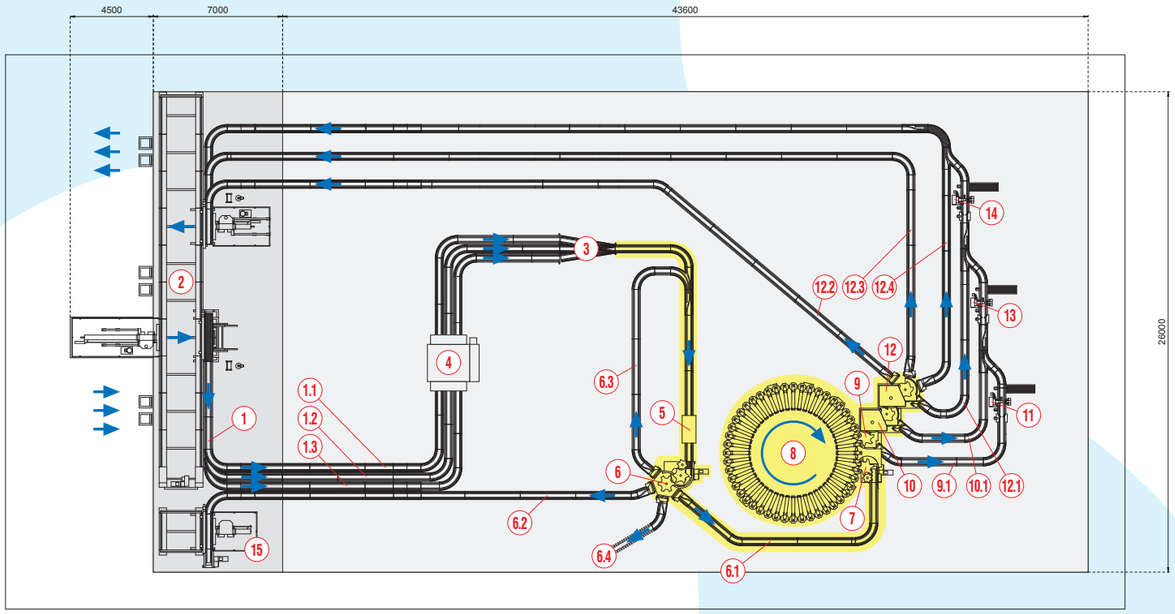

FLEXSPEED LAYOUT

GENERAL
CYLINDER FLOW DESCRIPTION

The cylinders for filling are loaded onto the chain conveyor system (1) of the filling plant from a pallet plant (2).

The cylinders are conveyed via the three inlet lines (1.1, 1.2, 1.3) to the invert module (3), where the three lines merge to one line. Before the invert module, a washing system (4) can be installed to secure higher readability of cylinder tare values on the cylinder shoulders.

The cylinders are conveyed on this line to the tare encoding station (5). All data (cylinder type, cylinder net, tare value) is archived in the cylinder data buffer, ready for use on the filling stands of the *FLEXSPEED* carrousel system.

The cylinders are conveyed to the divert/sort-out module (6) where the cylinders are either sorted for filling (6.1), sort-out (6.2) or no-read (6.3). Cylinders that are sent to filling (6.1) are conveyed to the carrousel inlet module (7). The cylinders are introduced onto the carrousel (8), one cylinder on each filling stand. All cylinders are filled and check weighed on the carrousel.

After filling, the cylinders are ejected from the carrousel by an outlet module (9) either to the first process module (10), in this case a leak detector, or, if under/overfilled to a sort-out line (9.1) leading to an adjustment scale (11). The cylinders are leak tested in the first process module (10) and transferred to the next process module (12), in this case a valve testing unit. Each process module has a sort-out line. (10.1, 12.1) for leaking cylinders.

After the last process module (12), the cylinders are transferred to three outlet chain conveyor lines (12.2, 12.3, 12.4) leading back to the pallet plant (2).

CHAIN CONVEYOR SYSTEM

The chain conveyor system used for *FLEXSPEED* is Kosan Crisplant's standard conveyor system. Both Kosan Crisplant dry chain conveyor and soap water lubricated systems can be used. However, instead of a standard power panel with start and stop buttons, the *FLEXSPEED* chain conveyor system is controlled by a PLC with infinitely variable speed control.

The control box for adjusting the chain conveyor speed, and thereby the production output, is normally placed by the filling carrousel (8).

For more details on the chain conveyor system, please see the product-specific documentation.

CYLINDER
LOADING/UNLOADING SYSTEM

In order to fully utilize the high capacity of *FLEXSPEED* it is essential that the filling system is fed with enough empty cylinders and that the filled cylinders exit the system equally fast. This can be done either by means of a pallet plant solution (2) or a solution with telescopic conveyors.

If choosing a pallet plant solution, it will be a linear pallet plant with up to three storeys (2).

For more details on linear pallet plants or telescopic conveyors, please see the product-specific documentation.

INVERT MODULE

The invert module (3) merges up to three inlet chain conveyor lines coming from the ramp area into one high speed line going towards the filling carrousel (8).

When merging two lines only, a standard Kosan Crisplant Y conveyor section can be used.

The invert module secures that the cylinders are merged smoothly and at high speed when entering the high speed area (yellow area on *FLEXSPEED* LAYOUT) of the *FLEXSPEED* system.

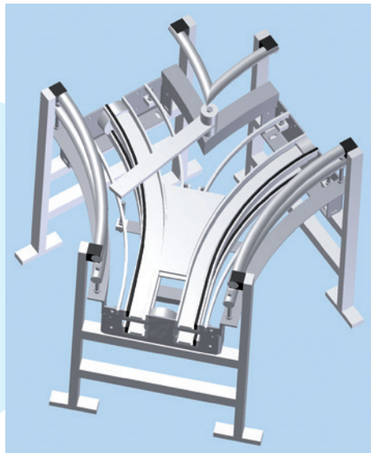

TARE ENCODING

The traditional manual tare encoding methods used for traditional electronic systems cannot accommodate *FLEXSPEED's* demand for high tare entry capacity.

The following tare encoding methods are available today:

- Fully automatic tare entry based on vision recognition
- Semi-automatic tare entry based on vision recognition with operator tare input
- Tag reading system
- Barcode reading system
- Fix tare operation

The fully automatic tare encoding system with vision recognition is based on a camera solution. The tare value painted/printed on the cylinder is photographed and the value is automatically translated by an OCR-software and sent to the *FLEXSPEED* system.

The semi-automatic tare encoding system with vision recognition is also based on a camera solution. The system consists of a vision system that 'photographs' each cylinder – while it is in motion. The photos are forwarded to a connected computer and displayed on a screen. An operator then enters the tare value shown on the screen. To increase tare entry capacity, additional computers/operators are added. The system automatically keeps track of the cylinder sequencing.

The tag reading system is based on the different RFID tags available on the market. The RFID tag is read, and the tare value is sent via a Kosan Crisplant interface module to the *FLEXSPEED* system.

The bar code reading system essentially works the same way as the tag reading system – the tare value is read and sent to the *FLEXSPEED* system via a Kosan Crisplant interface module.

Operating with a fix tare value for all cylinders is primarily relevant when filling composite cylinders or other cylinder types with identical tare values, thus making separate tare entry unnecessary.

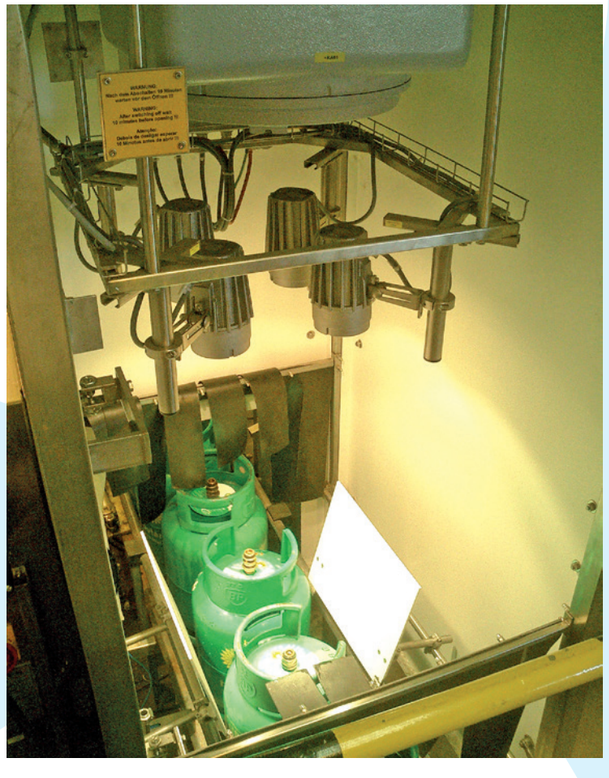

DIVERT MODULE

Kosan Crisplant's patented divert/sort-out module (6) ensures smooth and accurate distribution of cylinders to specific processes. A divert/sort-out module can be designed with up to four sort-out lines.

For example after tare reading, the cylinders enter the divert module, and may be sent to the filling carrousel (6.1), to sort-out for cylinder refurbishment (6.2), to a second sort-out line (for example foreign cylinders or to pressure testing (6.4)), or they may be sent back to the tare encoding system for re-taring (6.3).

Re-taring must be carried out if a cylinder was not identified or read correctly the first time. The reason for this could be damaged or unclear marking, dirt on the printing, etc. which can be corrected by an operator at the conveyor loop (6.3).

CARROUSEL INLET MODULE

The patented inlet module (7) runs synchronically with the carrousel (8), the outlet (9) and the process modules (10, 12), as they are all connected to the same gear and motor.

The inlet is designed for smooth transfer of cylinders from the chain conveyor to a filling stand on the carrousel without the cylinder ever coming to a stop.

A PLC controls the cylinder flow to the carrousel inlet by means of a series of sensors and frequency inverters. If there are not enough cylinders before the inlet module, the system will slow down the speed, adjusting to the actual flow of cylinders. In no cylinders at all reach the inlet module, the system will automatically come to a complete stop. It will automatically restart when the cylinder flow to the inlet module normalizes.

If a cylinder is stuck in the inlet module (e.g. due to a damaged base ring), the built-in safety coupling will disengage the inlet module star, and stop the system. An operator can now easily and safely remove the cylinder and re-engage the inlet module star by manually turning the star until it automatically re-engages. The system is now ready for reset and restart.

This safety feature ensures that no machinery is damaged by a stuck cylinder, and it makes it very safe for the operator to re-start the system.

CARROUSEL WITH FILLING STANDS

The patented *FLEXSPEED* Trend Filling System consists of a number of individual filling stands, a parallel arm system, an inner carrousel and an outer rail/load cell system. This unique system allows the *FLEXSPEED* system to weigh each individual filling stand five times during a full carrousel rotation.

The number of filling stands on a carrousel system (8) depends on the required capacity and the filling time of the cylinders to be filled. A *FLEXSPEED* carrousel can be equipped with 30 and up to 72 filling stands. The diameter of the carrousel varies from 4,900 mm (30 filling stands) to 11,200 mm (72 filling stands).

Each individual filling stand is equipped with a fully automatic filling head. Each cylinder is transferred from the chain conveyor to a filling stand on the carrousel by the inlet star. The inlet star guides the cylinder smoothly and ensures that it is placed correctly on the filling stand. When the cylinder is released by the inlet star, the automatic filling head connects to the cylinder valve. The combination of these two synchronized actions makes the use of centring devices unnecessary.

The filling and check weighing processes on the *FLEXSPEED* system are controlled by a total of five individual scales placed under the rotating carrousel:

1 Zero setting scale
2 Residual gas scale
3 Trend scale
4 Top-up scale
5 Check scale

The basic function of the patented *FLEXSPEED* Trend Filling System is to measure the effective flow rate (grams per second) in the first stage of the filling process (FS I). The flow rate depends on various factors such as the cylinder valve restriction, the filling pressure, the pressure in the cylinder, etc. The flow rate varies significantly from cylinder to cylinder. Based on the cylinder's flow rate, the CUC controller is able to predict the remaining filling time to reach the target net volume of gas to be filled (FS II & FS III). Therefore it is extremely important to accurately measure the flow rate in order to fill the cylinder accurately.

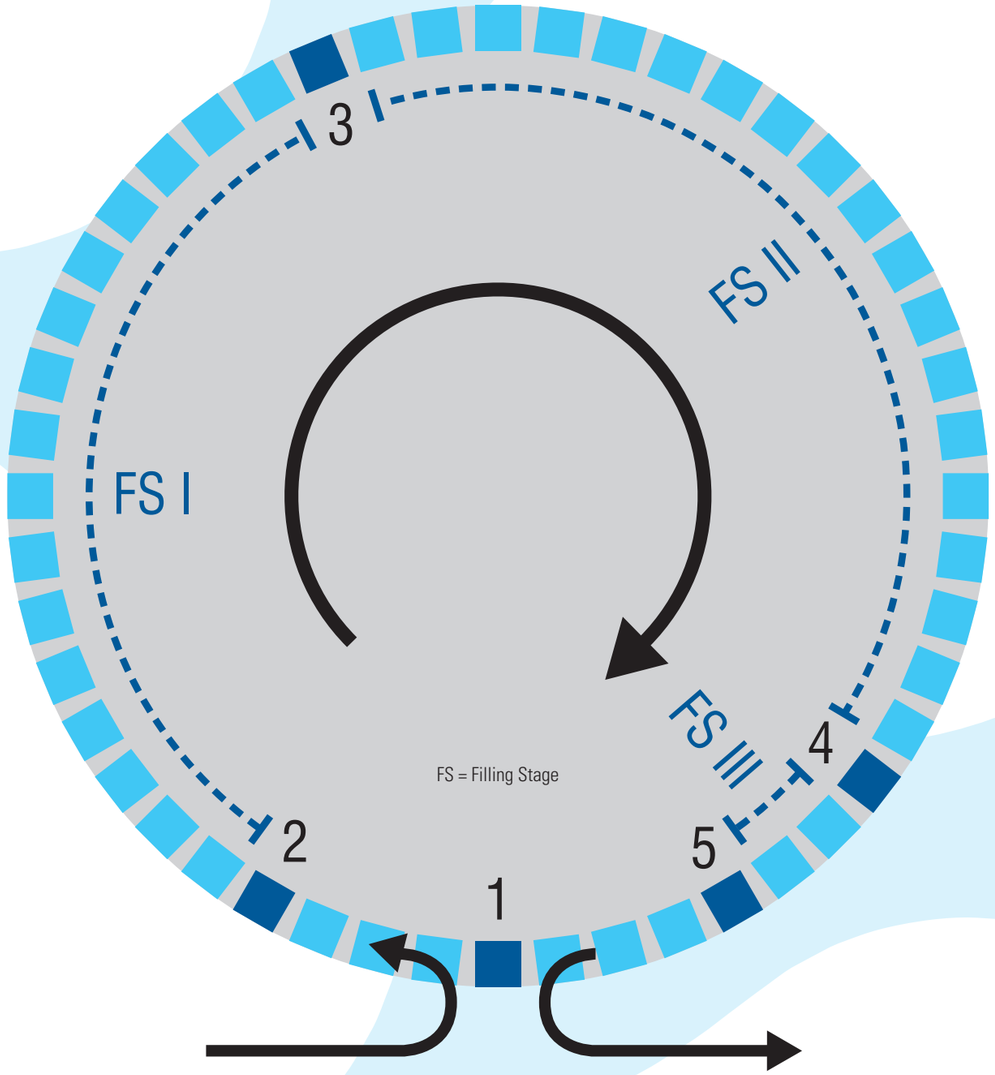

This graph shows the principle of the trend filling stages for three cylinders with different flow rates.

The red line represents the cylinder with the fastest flow rate and the blue line represents the cylinder with the slowest flow rate.

In this example, all three cylinders are without residual gas before filling.

FS I = Trend filling stage I (pre-filling)
FS II = Trend filling stage II (filling)
FS III = Trend filling stage III (top-up filling)

W = Net weight (kg)
T = Time (seconds)
b/c = Break/Calculation stage (no filling)

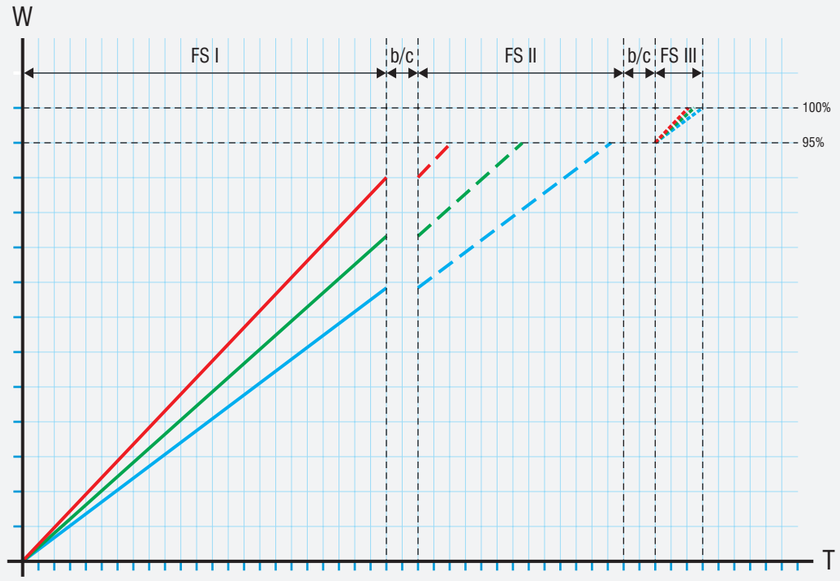

Trend filling stages for cylinders without residual gas

Trend filling stages on the carrousel

A Before the cylinder is introduced onto the filling stand, the filling stand in question has been weighed by the zero setting scale to adjust for the filling stand's unloaded weight.

B The cylinder is now introduced onto the carrousel filling stand and the cylinder's tare weight is transferred from the tare encoding unit to the residual gas scale. The residual gas scale will now calculate the amount of gas to be filled (net weight in kg) by comparing the cylinders actual weight and the tare weight.

C **FS I – Trend filling stage I (pre-filling)** – Based on the net weight, the system calculates the number of seconds to pre-fill the cylinder without yet knowing the flow rate of the cylinder. The optimal time to fill in this pre-filling stage is the time it will take to fill 40% of the net weight. When the time is calculated, the filling starts automatically and will stop automatically after the calculated pre-filling time – and always before the filling stand reaches the trend scale.

D **FS II – Trend filling stage II (filling)** – When the filling stand passes the trend scale, the amount of gas filled so far is read and the system calculates the flow rate of this specific cylinder. Based on this flow rate the system now calculates the remaining filling time needed to reach 95% of the net weight. The filling process re-starts automatically and will stop automatically after the calculated filing time – and always before the filling stand reaches the top up scale.

E **FS III – Trend filling stage III (top-up filling)** – When the filling stand passes the top-up scale, the amount of gas filled so far is again read and the system calculates the amount of time to fill – or top-up – to reach the net kg. The filling process re-starts automatically and will stop automatically after the calculated top-up filing time – and always before the filling stand reaches the check scale. This ensures an extremely high filling accuracy and reduces the risk of overfilling cylinders.

F Finally the filling stand passes the check scale, which carries out the final control before the outlet module guides the cylinder off the carrousel filling stand.

G The filling stand now passes the zero setting scale again, before the next cylinder is introduced.

This graph shows the principle of the trend filling stages for three cylinders with different flow rates.

The red line represents the cylinder with the fastest flow rate and the blue line represents the cylinder with the slowest flow rate.

In this example, all three cylinders contain residual gas before filling.

FS I = Trend filling stage I (pre-filling)
FS II = Trend filling stage II (filling)
FS III = Trend filling stage III (top-up filling)

W = Net weight (kg)
T = Time (seconds)
b/c = Break/Calculation stage (no filling)

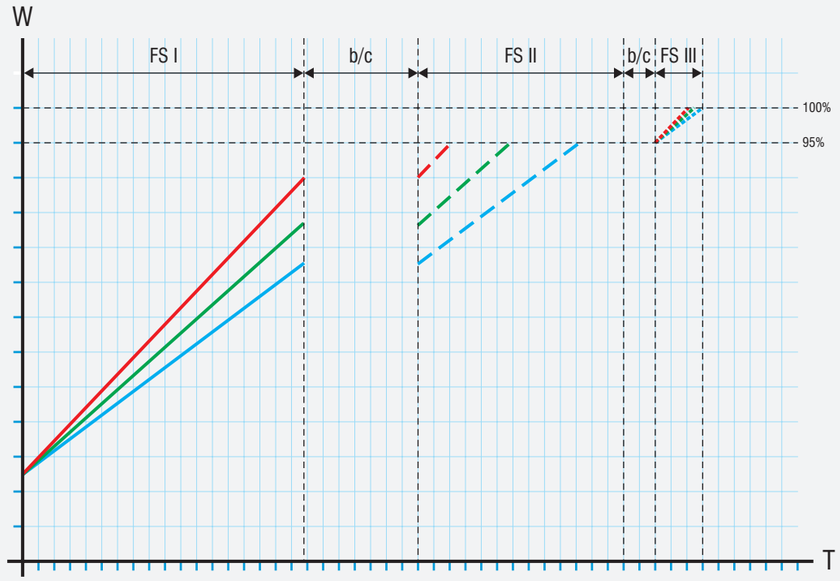

Trend filling stages for cylinders with residual gas

HMI/CUC controller

Kosan Crisplant's well-proved HMI/CUC controller manages all processes, calculations and data communication between all units during the entire filling process.

The latest model, the HMI/CUC MKIII, has been considerably improved and specially developed for high capacity performance, with new features such as,

- Larger and clearer display with backlight (128x64 pixels)
- Extended memory – higher capacity for running programs
- New enhanced loadcell interface for faster data handling
- Smooth system start-up (lower current on power on)
- Updated according to latest ATEX standards

CARROUSEL OUTLET MODULE

The patented outlet module (9) runs synchronically with the carrousel (8), the inlet module (7) and the process modules (10, 12) as they are all connected to the same gear and motor.

The outlet module is designed for smooth transfer of cylinders from the carrousel filling stands to the first process module, without the cylinder ever coming to a stop.

However, incorrectly filled cylinders registered by the check scale on the carrousel are sorted out to a chain conveyor (9.1) leading to an adjustment scale (11). Here the weight of the under-/overfilled cylinders is corrected.

Then they are transferred to the in-line leak detector (13).

If a cylinder gets stuck in the outlet module (e.g. due to a damaged base ring), the built-in safety coupling will disengage the outlet module star, and stop the system. An operator can now easily and safely remove the cylinder and re-engage the outlet module star by manually turning the star until it automatically re-engages. The system is now ready for reset and restart.

This safety feature ensures that no machinery is damaged by a stuck cylinder, and it makes it very safe for the operator to re-start the system.

PROCESS MODULE 1
LEAK DETECTOR

The leak detection process module (10) is a small carrousel unit with six detection stands. As soon as the filling carrousel outlet module (9) has released the cylinder onto a detection stand in the process module (10), a detection head is lowered onto the cylinder valve starting the leak detection process automatically. If a leak is detected, the cylinder is sorted out to a chain conveyor (10.1) leading to an in-line leak detector (13) for a second test. If the cylinder is ok, it is transferred to the main chain conveyor line, towards the pallet plant (2). If the cylinder is leaky, it is sorted out for e.g. evacuation and valve change/repair.

The cylinders that pass the leak test in the process module are transferred directly to the next process module (12).

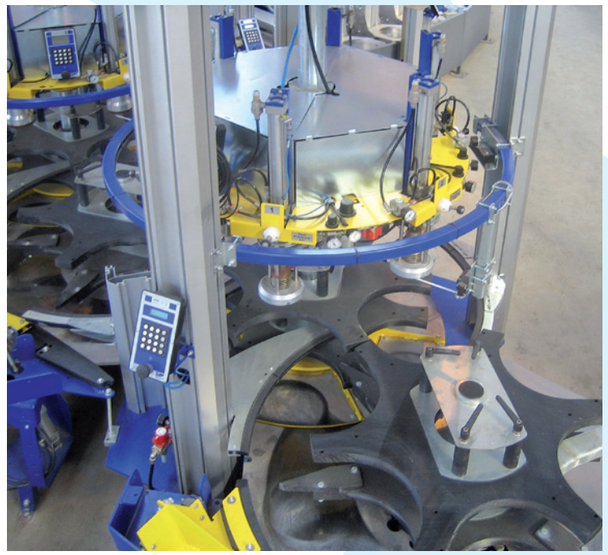

PROCESS MODULE 2
VALVE TESTER

The valve testing process module (12) is a small carrousel unit with six testing stands. As soon as the previous process module (10) has released the cylinder onto a testing stand in the process module, a testing head is lowered onto the cylinder valve starting the valve testing process automatically. If a valve is defective, the cylinder is sorted out to a chain conveyor (12.1) leading to an in-line valve tester (14) for a second test. If the cylinder is ok, it is transferred to the main chain conveyor line, towards the pallet plant (2). If the cylinder valve is damaged, the cylinder is sorted out for e.g. evacuation and valve change or repair.

Cylinders which pass the valve test in the process module (12) are distributed directly to three chain conveyor lines (12.2, 12.3, 12.4) leading towards the pallet plant (2).

The cylinders now leave the high speed area (yellow area on *FLEXSPEED* LAYOUT) of the *FLEXSPEED* system.

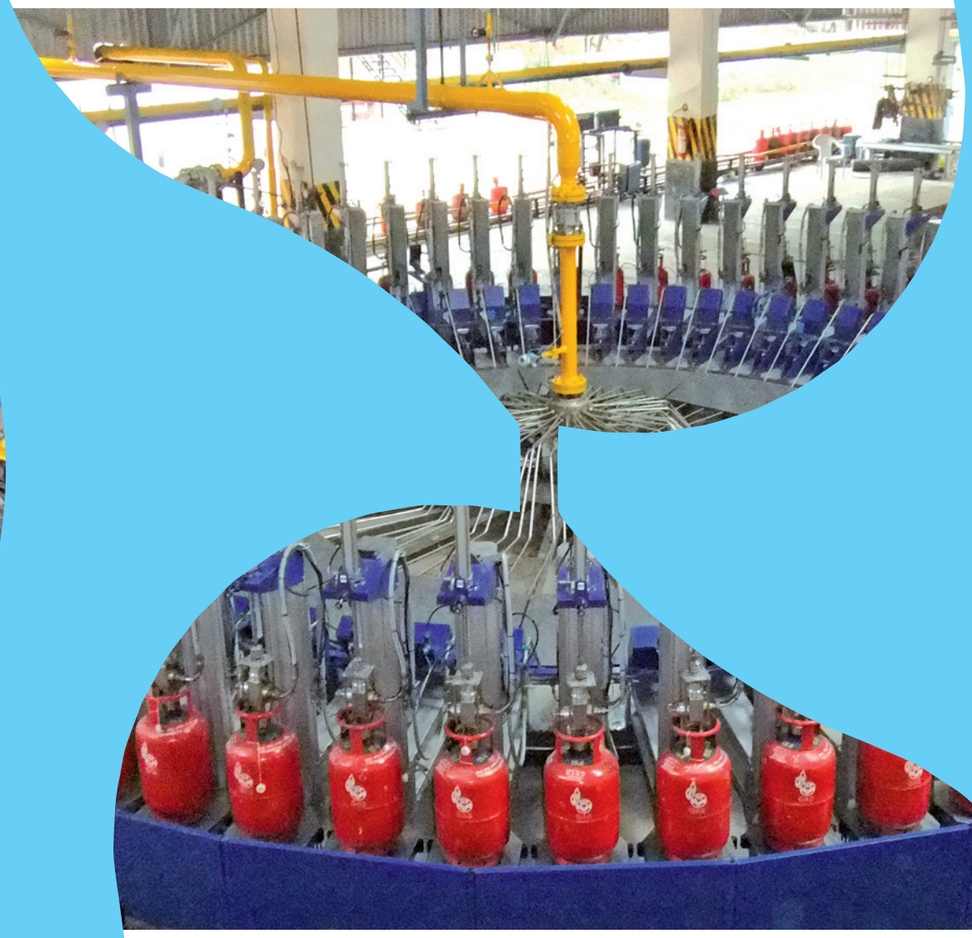

Kosan Crisplant®
FLEXSPEED®

Kosan Crisplant®

FLEX SPEED®

Kosan Crisplant a/s
Alsvej 21
DK-8940 Randers SV
Denmark

Tel +45 8740 3000
Fax +45 8740 3010
sales@makeenenergy.com
service@makeenenergy.com
www.kosancrisplant.com
www.flexspeed.info
www.makeenenergy.com

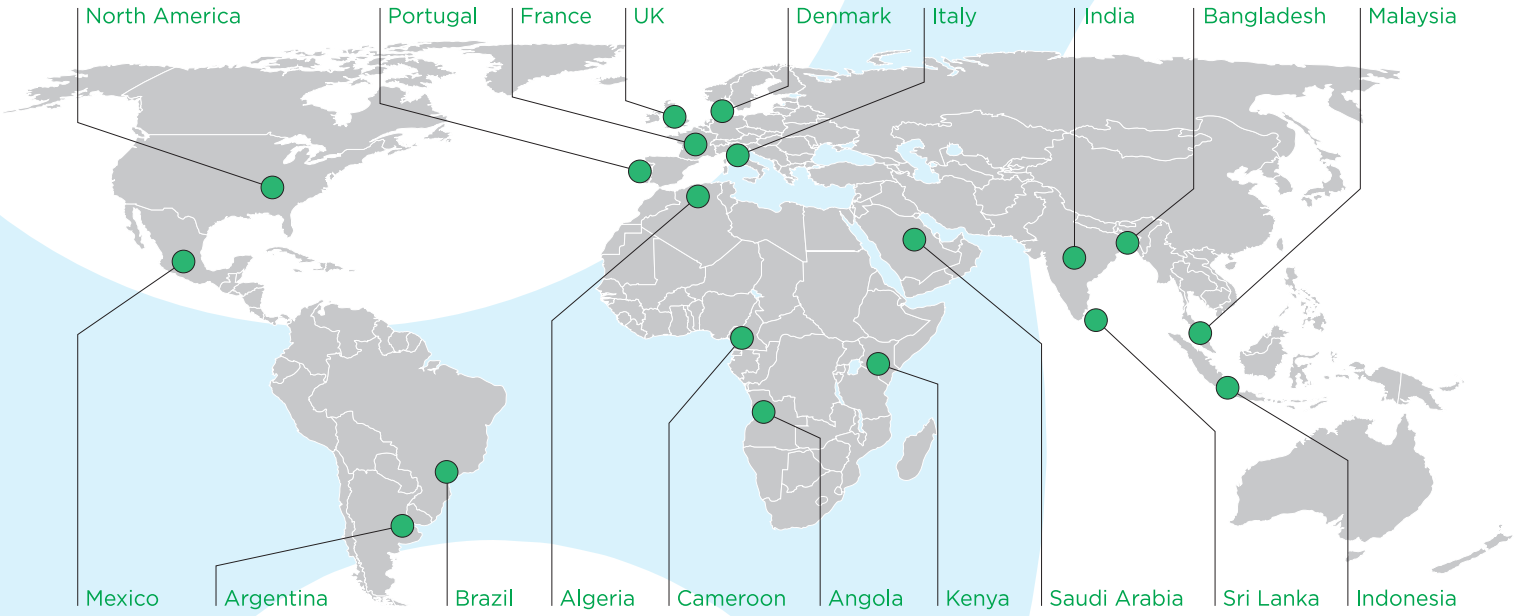

Kosan Crisplant is part of MAKEEN ENERGY